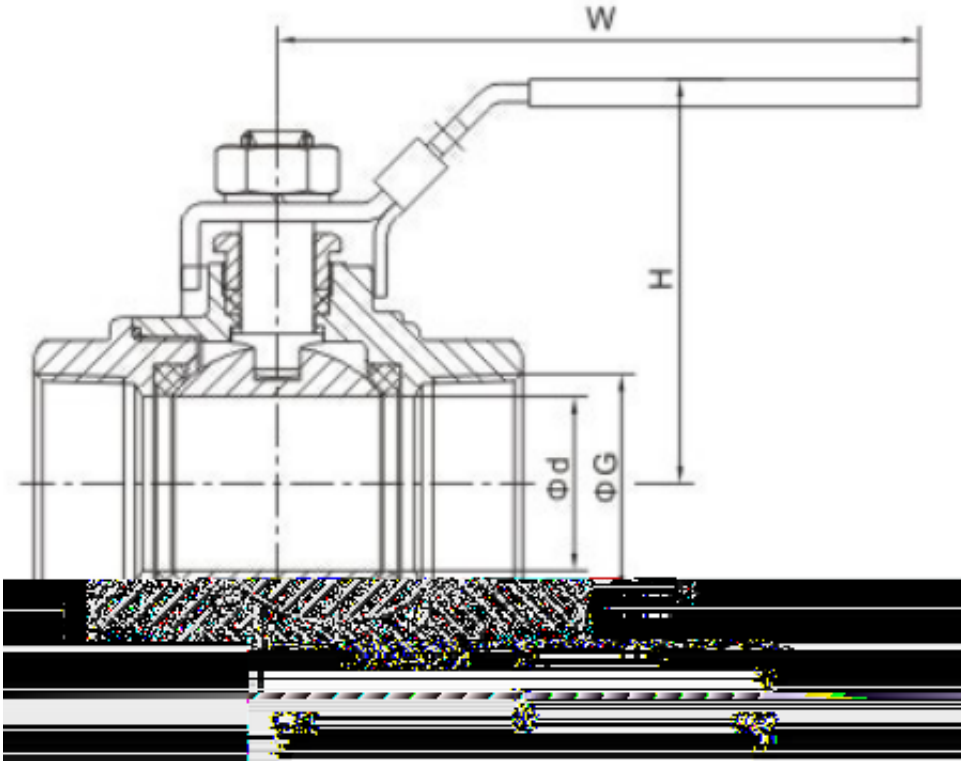
W
H
Φd
ΦG

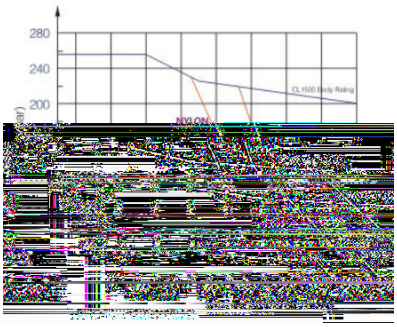
280
240
200
NYLON
CL 1500 Body Rating